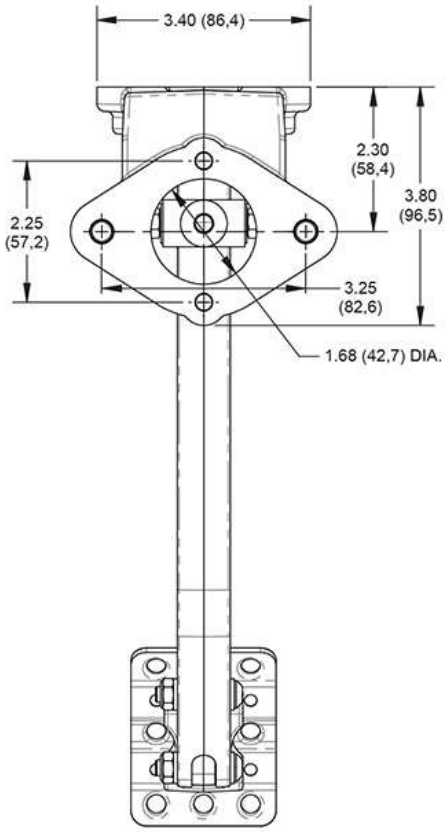

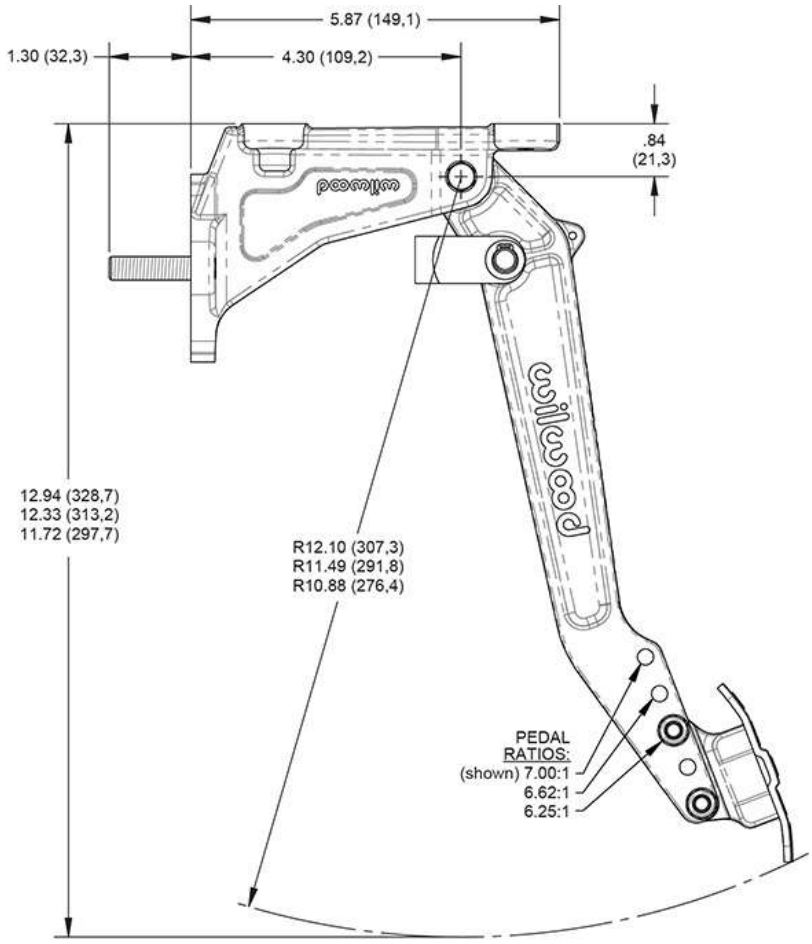

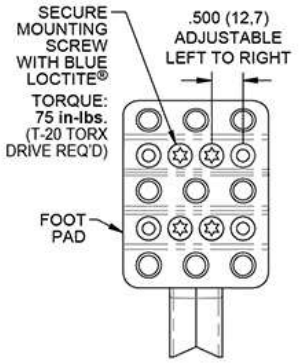
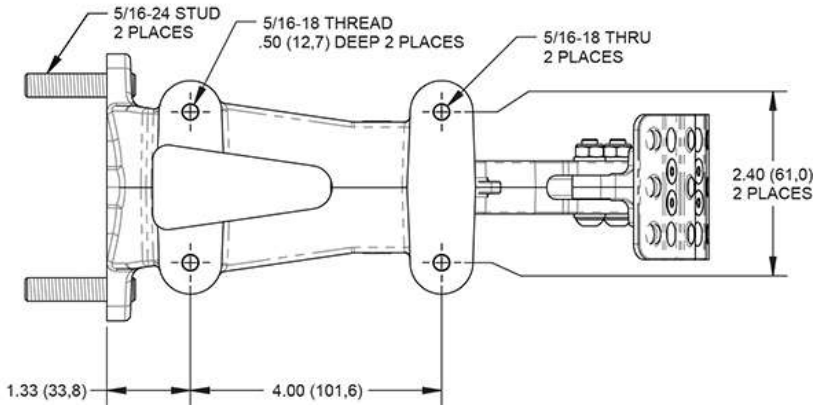
FOOT PAD DETAIL